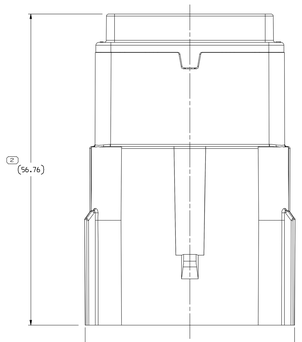

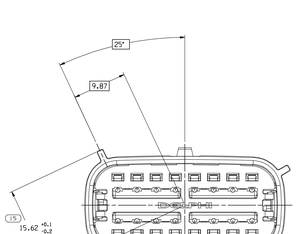

TYPE 203
SAME AS TYPE 201
EXCEPT AS SHOWN

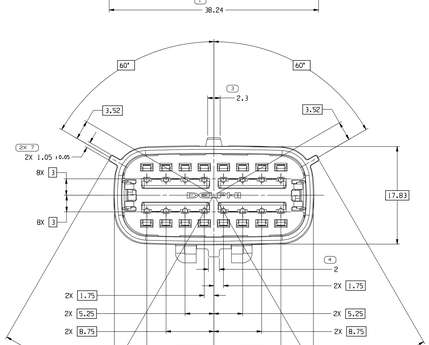

TYPE 201

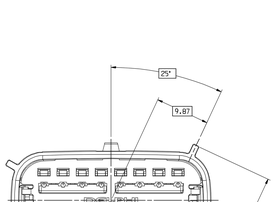

TYPE 202
SAME AS TYPE 201
EXCEPT AS SHOWN

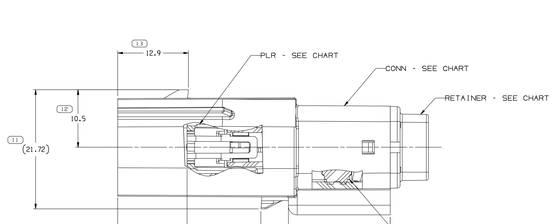

SYMBOL DEFINITION		
A DIMENSION WITHOUT AN INSPECTION REPORT SYMBOL (□) DOES NOT REQUIRE INSPECTION. IT MAY BE CONTROLLED ON THE INDIVIDUAL COMPONENT DRAWING.	TOTAL NO OF INSPECTIONS REQUIRED	16
	LAST NO. USED	15

MISSING SYMBOLS
NO MISSING SYMBOL NUMBER

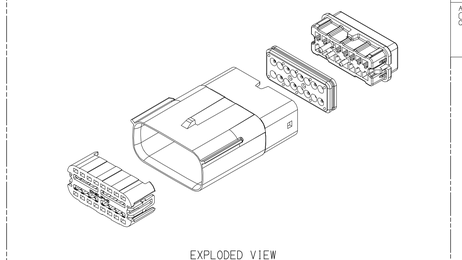

EXPLODED VIEW
SCALE 2:1

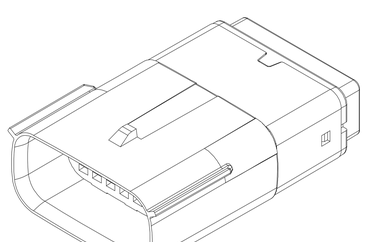

DWG STATUS					ZONE	REVISION HISTORY	AUTH	DR	APVD	APVD
DATE	STS	REV	N/P	CHG						
15FE17	R	01	-	-	-	ALL PART - RELEASED PART DRAWING	435542	AHD	AHD	JJE
21JN17	R	02	-	-	-	ALL PARTS - UPDATED RETAINER TO LATEST REVISION AND CORRECTED CALLOUT "TYPE 201" INSTEAD OF "TYPE 202"	437022	JDM	JDM	DAT
30AU17	R	03	-	-	-	35123791 & 92, 94-96 & 98 - RELEASED	437570	ADC	ADC	JJE
06NO17	R	04	-	-	-	ALL PARTS - 12.65 ±0.5 PLR WAS 12.65 ±0.05 PLR	438316	AHD	AHD	JC
07NO17	R	05	-	-	-	35237543,44, 35237559,60 - UPDATED PART AVAILABILITY	438331	AHD	AHD	JC
23FE18	R	06	-	-	-	ALL PARTS - REMOVED "ACCEPT CABLE" NOTE	439093	JXA	JXA	ACV
04AP18	R	07	-	-	-	35197882-B4 - RELEASED	439380	AHD	AHD	JJE
17MY18	R	08	-	-	-	35205201 - RELEASED	439617	LVD	JAA	JJE
25JN18	R	09	-	-	-	35123791-92,94-96 & 98 - BASE CONN P/N WAS 35021680 & ADDED VIEW TYPE 203; 35123792 & 95 - UPDATED PART AVAILABILITY	440196	LVD	JAA	JJE
13NO18	R	10	-	-	-	35275822 - RELEASED	441509	AHD	AHD	JC
05FE19	R	11	-	-	-	35311533-36 - RELEASED	442209	DDH	JAA	MV
11MR19	R	12	-	-	-	35237556, 35275822 - UPDATED PART AVAILABILITY	442601	JCA	RED	JCA
19MR19	R	13	-	-	-	35323867-68 - RELEASED	442718	DAV	JAA	JCA
07JN19	R	14	-	-	-	ALL PARTS - ADDED "OPEN CAVITY VERSIONS", "ASSEMBLES WITH 7MM" AND "MINIMUM RETAINER DISENGAGE FORCE: 60N" ADDED "SEAL KEY OPTION" COLUMN; 35294075 - WAS ON DRAWING 15521026-SHT 21 35037546 - UPDATED PART AVAILABILITY	443301	JLL	JAA	ACV
19JL19	R	15	-	-	-	35205201 - UPDATED PART AVAILABILITY	444008	DML	JAA	DML
23SE19	R	16	-	-	-	35327867 - UPDATED PART AVAILABILITY	550093	JLL	JAA	DML
10OC19	R	17	-	-	-	35402944 - RELEASED	550229	JXA	JDM	JAF
11OC19	R	18	-	-	-	35402944 - UPDATED PART AVAILABILITY	550254	JAA	JAA	JAF
18MR20	R	19	-	-	-	35327868 - UPDATED PART AVAILABILITY	551306	JXA	JXA	JCA
29JL20	R	20	-	-	-	35483842-47,49,50 - RELEASED	552133			SV

TEMPORARY PRODUCTION PRINT			
C/N 552133			
APPROVED BY	Sergio Villarreal	DATE	29JL20
APPROVED BY	Mark McCall	DATE	31JL20

PART NO	REV	N/P	TYPE	MALE CONN	PLR	CABLE SEAL	RETAINER	1	2	3	4	5	6	7	8	9	10	11	12	13	14	15	16	TOTAL BLOCKED CAVITIES	USCAR KEY OPTION
								BLOCKED CAVITIES																	
35483850	01	-	201	35021680	15521010	15521007	35483860	-	-	-	-	-	-	X	-	-	-	-	-	-	-	-	-	1	A
35483849	01	-	201	35021680	15521010	15521007	35483859	-	-	-	-	-	-	X	X	X	X	X	-	-	-	-	-	5	A
35483847	01	-	201	35021680	15521010	15521007	35483858	-	-	X	X	-	-	-	X	-	-	-	-	-	-	-	-	3	A
35483846	01	-	201	35021680	15521010	15521007	35483857	-	-	X	X	-	-	-	X	X	X	X	X	-	-	-	-	7	A
35483845	01	-	201	35021680	15521010	15521007	35483856	-	-	X	X	X	X	-	X	-	-	-	-	-	-	X	-	6	A
35483844	01	-	201	35021680	15521010	15521007	35483855	-	-	X	X	X	X	-	X	X	X	X	X	-	-	X	-	10	A
35483843	01	-	201	35021680	15521010	15521007	35483854	-	-	-	-	-	X	-	X	-	-	-	-	-	-	X	-	3	A
35483842	01	-	201	35021680	15521010	15521007	35483853	-	-	-	-	-	X	-	X	X	X	X	X	-	-	X	-	7	A
35402944	01	AA	203	35021681	15521010	15521007	15514456	X	X	X	X	X	X	X	X	X	X	X	X	X	X	X	X	16	B
35249075	01	AB	201	35021680	15521010	15521007	35249168	-	-	X	X	X	X	-	X	-	-	-	-	-	-	X	-	7	A
35327868	01	AB	201	35021680	15521010	15521007	35327848	-	X	-	X	X	-	X	X	-	-	X	X	X	-	X	-	9	A
35327867	01	AB	201	35021680	15521010	15521007	35327850	-	-	-	-	X	X	X	X	-	-	-	-	X	X	X	-	7	A
35311532	01	AA	201	35021680	15521010	15521007	35311532	-	-	X	X	-	X	-	X	-	-	-	-	-	-	X	X	6	A
35311531	01	AA	201	35021680	15521010	15521007	35311531	-	-	X	X	-	X	-	X	X	X	X	X	-	-	X	X	10	A
35311530	01	AA	201	35021680	15521010	15521007	35311530	-	-	-	-	-	X	-	X	-	-	-	-	-	-	X	X	4	A
35311529	01	AA	201	35021680	15521010	15521007	35311529	-	-	-	-	-	X	-	X	X	X	X	X	-	-	X	X	8	A
35275822	01	AB	201	35021680	15521010	15521007	35275825	-	-	-	-	-	-	-	-	-	-	-	-	X	X	-	-	2	A
35205201	01	AB	201	35021680	15521010	15521007	35205207	-	-	-	-	-	-	-	-	-	-	-	-	X	X	X	-	3	A
35197084	01	AA	202	35021682	15521010	15521007	35197069	-	X	-	-	-	-	X	X	-	-	-	-	X	X	X	X	7	C
35197083	01	AA	202	35021682	15521010	15521007	35197068	X	X	-	-	-	-	X	X	-	-	-	-	X	X	X	X	8	C
35197082	01	AA	202	35021682	15521010	15521007	35197067	-	X	-	-	-	X	X	X	-	-	-	-	X	X	X	X	8	C
35123798	01	AD	203	35021681	15521010	15521007	35123816	X	X	X	X	-	-	X	-	-	-	-	-	X	X	X	X	9	B
35123796	01	AD	203	35021681	15521010	15521007	35123815	-	-	-	-	-	-	-	-	-	-	-	-	X	X	X	X	4	B
35123795	01	AD	203	35021681	15521010	15521007	35123814	-	-	-	-	-	X	-	-	-	-	-	-	X	X	X	X	5	B
35123794	01	AD	203	35021681	15521010	15521007	35123813	X	X	X	X	-	X	X	-	-	-	-	-	X	X	X	X	10	B
35123792	01	AD	203	35021681	15521010	15521007	35123811	-	-	-	-	-	X	-	-	-	-	-	-	X	X	X	X	5	B
35123791	01	AD	203	35021681	15521010	15521007	35123810	X	X	X	X	X	-	X	-	-	-	-	-	X	X	X	X	10	B
35075468	01	AD	201	35021680	15521010	15521007	35015522	X	X	X	X	-	-	-	X	X	X	X	X	-	-	-	X	10	A
35075467	01	AD	201	35021680	15521010	15521007	35015521	X	X	X	X	-	-	X	X	X	X	X	X	-	-	X	X	12	A
35075462	01	AD	201	35021680	15521010	15521007	35015520	-	-	X	X	X	X	-	-	-	-	-	-	X	X	-	-	6	A
35075465	01	AD	201	35021680	15521010	15521007	35015519	-	X	-	-	-	-	-	-	X	-	X	X	X	-	-	-	5	A
35075464	01	AD	201	35021680	15521010	15521007	35015518	X	X	X	X	X	X	-	-	-	X	X	X	X	X	-	-	11	A
35075462	01	AD	201	35021680	15521010	15521007	35015517	X	X	X	X	X	X	-	-	-	-	-	X	X	X	X	-	8	A
35075461	01	AD	201	35021680	15521010	15521007	35015516	-	-	-	-	-	X	-	-	-	X	X	X	X	X	-	-	6	A
35037560	01	AE	201	35021680	15521010	15521007	33374897	-	-	X	-	-	X	-	-	-	-	-	-	-	-	-	-	2	A
35037559	01	AE	201	35021680	15521010	15521007	33368218	-	-	-	-	-	-	-	-	-	-	-	-	-	-	X	-	1	A
35075468	01	AD	201	35021680	15521010	15521007	33368217	-	X	-	-	-	-	X	-	X	-	-	X	X	X	-	X	7	A
35075467	01	AD	201	35021680	15521010	15521007	33368216	X	X	-	-	-	-	X	-	X	X	X	X	X	X	-	X	10	A
35075466	01	AD	201	35021680	15521010	15521007	33368215	-	X	-	-	X	-	X	-	X	-	-	X	X	X	-	X	8	A
35075465	01	AD	201	35021680	15521010	15521007	33368214	-	-	-	-	-	-	X	-	-	-	-	-	-	-	X	-	2	A
35075464	01	AD	201	35021680	15521010	15521007	33368213	X	X	-	-	X	-	X	-	X	X	X	X	X	X	-	X	11	A
35075463	01	AD	201	35021680	15521010	15521007	33368212	-	X	-	-	X	-	-	-	X	-	-	-	-	-	-	-	3	A
35075463	01	AD	201	35021680	15521010	15521007	33368211	-	X	-	-	-	-	X	-	X	-	-	-	-	-	-	X	4	A
35075462	01	AD	201	35021680	15521010	15521007	33368210	-	-	-	-	-	-	-	-	-	-	-	X	X	X	-	X	4	A
35075461	01	AD	201	35021680	15521010	15521007	33368209	-	X	-	-	-	-	-	-	X	-	-	-	-	-	-	-	2	A
35075460	01	AD	201	35021680	15521010	15521007	33368208	-	-	-	-	X	-	-	-	-	-	-	-	-	-	-	-	1	A
35037544	01	AE	201	35021680	15521010	15521007	33350473	X	X	X	-	-	-	-	-	-	-	-	-	-	-	-	-	3	A
35037543	01	AE	201	35021680	15521010	15521007	33350472	-	-	X	-	-	-	-	-	-	-	-	-	-	-	-	-	1	A

NOTES

1. UNLESS OTHERWISE SPECIFIED AND/OR INDICATED:

   DIMENSIONS ARE TO FACE OF VIEW SHOWN AND AUTOMATICALLY ROUNDED BY COMPUTER FOR INSPECTION (SEE MATH MODEL FOR PRECISE DIMENSIONS). FOR ALL OTHER DIMENSIONS NOT SHOWN BUT REQUIRED FOR TOOL BUILD, SEE MATH MODEL FOR PRECISE TOOL PATH DATA.

2. THIS PRODUCT IS NOT CATEGORIZED AS AN APPEARANCE ITEM, MINOR IMPERFECTIONS INCLUDING, BUT NOT LIMITED TO, FLOW MARKS, COLOR BLEMISHES, GATE VESTIGE, AND SOFT FLASH THAT DO NOT AFFECT THE FIT, FORM, OR FUNCTION OF THE PART ARE PERMISSIBLE PER EANP.4-3.CS.01.EN.

3. FOR APPLICATION DATA SEE THE INDIVIDUAL APPLICATION DRAWINGS.

4. PART IS MANUFACTURED TO GEOMETRIC TOLERANCES. CENTERLINE DIMENSIONS ARE FOR REFERENCE ONLY.

5. SEALING CODE 4 - DESIGN WILL MEET REQUIREMENTS OF SAE/USCAR-2 CONNECTOR SYSTEM ENVIRONMENTAL TEST FLOWCHART (PRESSURE/VACUUM AND SUBMERSION).

6. FOR ALL OPEN CAVITY VERSIONS SEE SHEET 1

7. FOR ASSEMBLIES WITH 7MM CLIP SLOT SEE DRAWING 15521026

8. MINIMUM RETAINER DISENGAGE FORCE: 60N.

THE DRAWING THROUGH 7 PART NUMBERS INDICATES THAT PHYSICAL PARTS ARE NOT AVAILABLE FOR ORDERING.	
THE NUMBERS THAT DO NOT HAVE A LINE PRESENT INDICATE THAT PHYSICAL PARTS ARE AVAILABLE FOR ORDERING.	
CONTACT APTIV SALES TO ASSURE AVAILABILITY OF PARTS.	
DWG TYPE	PART DRAWING
TITLE	
VOLUME CONTI	SYSTEM CODE D
UNLESS OTHERWISE SPECIFIED THIS DOCUMENT IS TO ACCORDANCE WITH ASME Y14.5M-1994 AS AMENDED BY THE ON GLOBAL DIMENSIONING AND TOLERANCING STANDARD. DIMENSIONS AND TOLERANCES APPLIED TO FEATURES MAY NOT BE MADE SEPARATELY REGARDLESS OF DATUM REFERENCES.	
ALL DIMENSIONS ARE IN MILLIMETERS	
(N/A) PROCESS SENSITIVE DIMENSION	
DIMENSIONS ENCLOSED IN 2 1 INDICATE REFERENCE DIMENSIONS AND NO TOLERANCE LIMITS ARE ESTABLISHED	

DIMENSIONAL RANGE (MM)	TOLERANCE
FROM UP TO	±0.05 ±0.1 ±0.2 ±0.3 ±0.5 ±1 ±2 ±3 ±5
0.5 6	0.05 0.1 0.2 0.3 0.5 1 2 3 5
6 30	0.1 0.2 0.3 0.5 1 2 3 5 8
30 120	0.2 0.3 0.5 1 2 3 5 8 13
120 400	0.3 0.5 1 2 3 5 8 13 21
400 1000	0.5 1 2 3 5 8 13 21 34
1000 2000	1 2 3 5 8 13 21 34 55
2000 4000	2 3 5 8 13 21 34 55 89

MODIFY TOLERANCE PER

THIRD ANGLE PROJECTION	DO NOT SCALE USE MATH DATA

APTIV
CONNECTION SYSTEMS
WARREN, OH
COPYRIGHT 2017 APTIV. ALL RIGHTS RESERVED.
THIS DRAWING IS THE PROPERTY OF APTIV AND CONTAINS APTIV CONFIDENTIAL INFORMATION. NEITHER THIS DRAWING NOR THE INFORMATION OR USE OF THIS DRAWING OR ITS RELATED CAD MATH DATA, AS WELL AS COMMUNICATION OF THE CONTENTS THEREOF, WITHOUT EXPRESS AUTHORIZATION, IS PROHIBITED.

DR	DATE
APVD1	
APVD2	
APVD3	
APVD4	
APVD5	

SUBSTANCES OF CONCERN AND RECYCLED CONTENT PER APTIV 1394/001

MATERIAL	
SEE CHART	

DRAWING NAME: TAXI ASM CONN 16 1.5

DRAWING NUMBER: 35021693

SIZE	SCALE	FRAME NO	SHEET NO	SHEETS	REV	N/P
A1x3	4:1	1 OF 2	2 OF		R	20 -

DRAWING NUMBER: 35021693
SIZE A1x3 SCALE 4:1 2 OF 2 SHEETS OF R 19 -

3205 1693
Model: 35021693-CAD-01-SHEET-2.MOD Date: 19-Mar-20 Time: 15:12:43
Model: 35021693-CAD-01-SHEET-2.MOD Date: 19-Mar-20 Time: 15:12:43